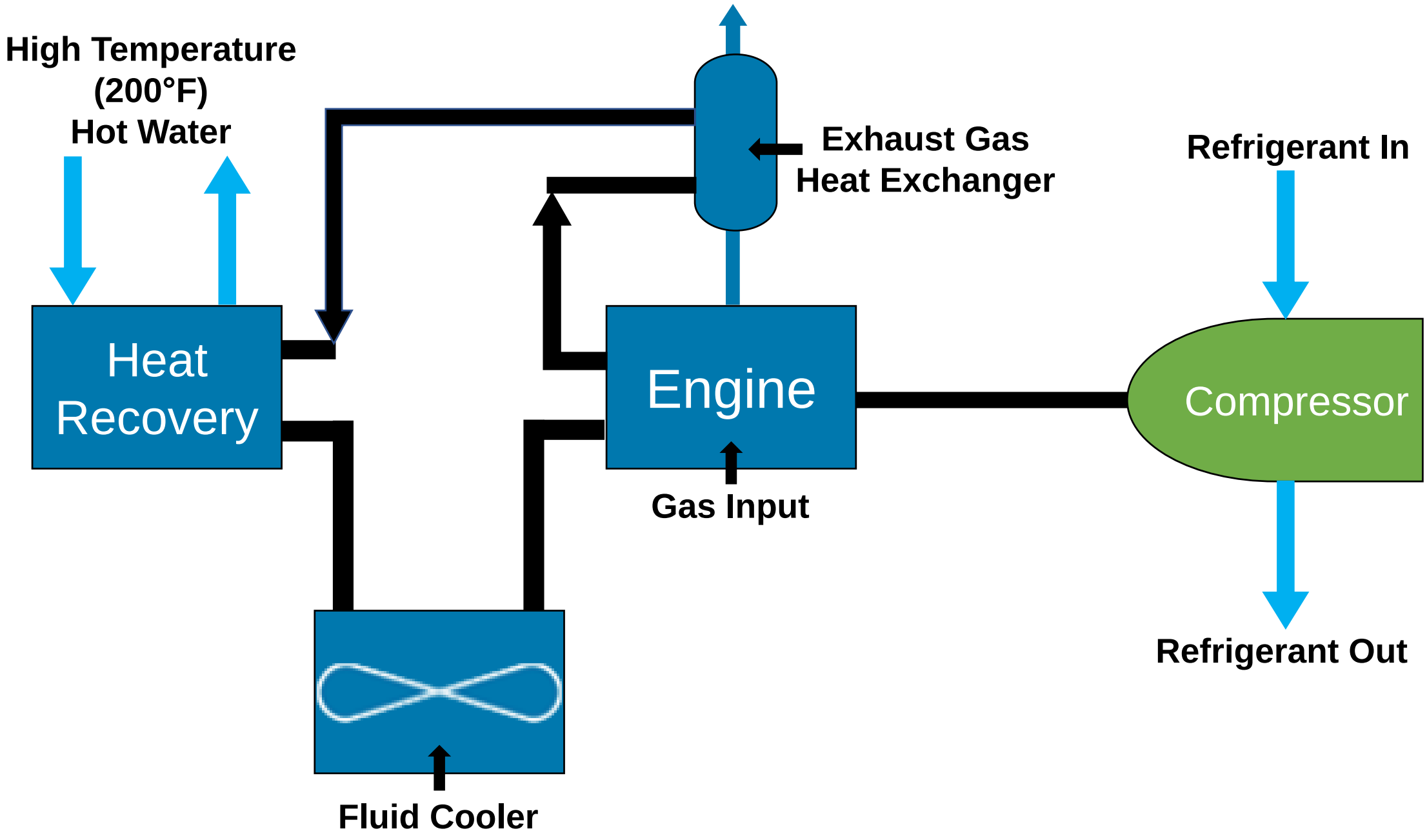
High Temperature
(200°F)
Hot Water
Exhaust Gas
Heat Exchanger
Refrigerant In
Heat
Recovery
Engine
Compressor
Gas Input
Refrigerant Out
Fluid Cooler